VOR-A
FRASCA FLD (C16)

VORTAC CMI	APP CRS	Rwy ldg	N/A
110.0	025°	TDZE	N/A
Chan 37		Apt Elev	735

A NA — Circling NA to Rwys 18 and 36. Use Champaign altimeter setting; when not received, use Decatur altimeter setting and increase all MDAs 80 feet and Cats A/B/D visibilities ¼ SM, Cat C visibility ½ SM; increase FANUK DME fix minimums Cats C/D visibility ¼ SM.

MISSED APPROACH: Climb to 2000 then climbing right turn to 2500 on CMI VORTAC R-062 to OCTOE INT and hold.

CHAMPAIGN APP CON ★	UNICOM
121.35 285.65	122.8 (CTAF)

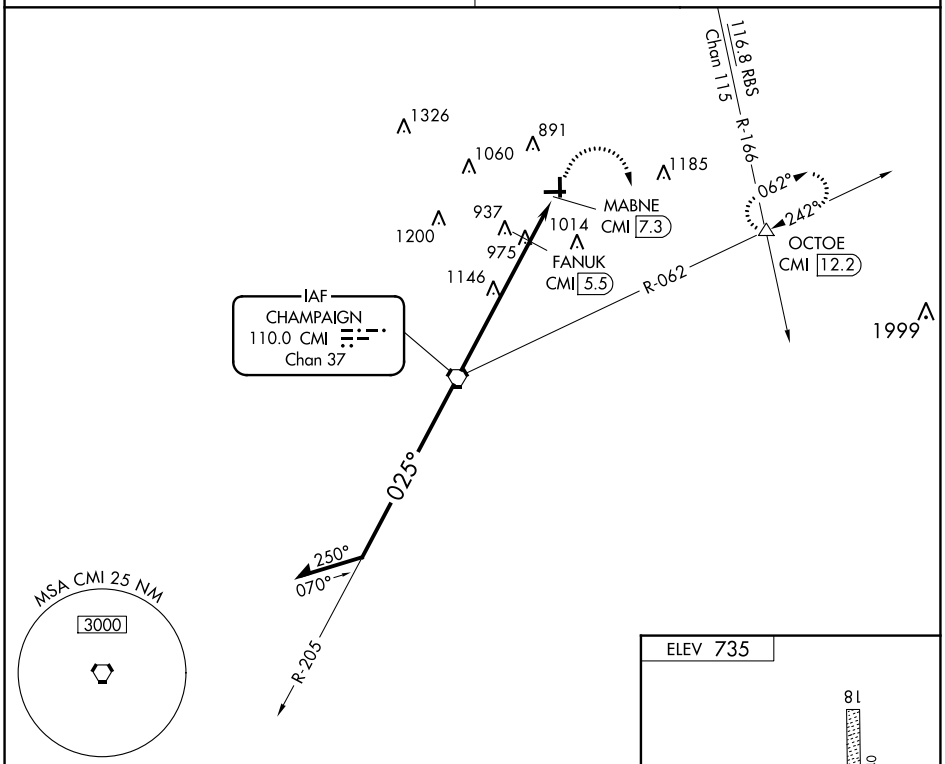

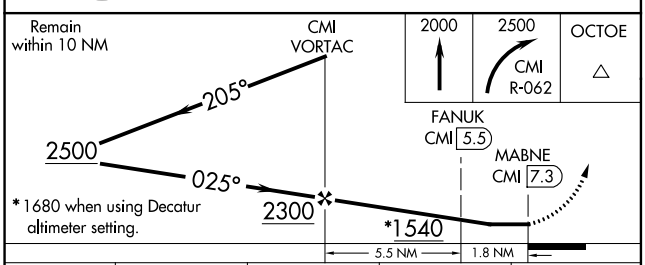

*1680 when using Decatur altimeter setting.

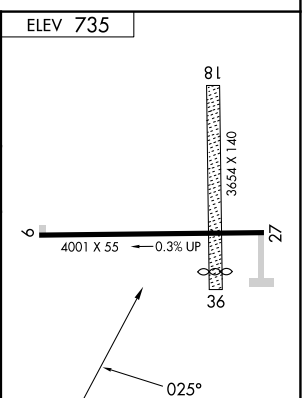

CATEGORY	A	B	C	D
C CIRCLING	1540-1 805 (900-1)	1540-1¼ 805 (900-1¼)	1540-2¼ 805 (900-2¼)	1560-2¾ 825 (900-2¾)
FANUK DME FIX MINIMUMS				
C CIRCLING	1300-1 565 (600-1)		1420-2 685 (700-2)	1560-2¾ 825 (900-2¾)

FAF to MAP 7.3 NM

Knots	60	90	120	150	180
Min:Sec	7:18	4:52	3:39	2:55	2:26

EC-3, 18 APR 2024 to 16 MAY 2024
EC-3, 18 APR 2024 to 16 MAY 2024