LOC I-MGJ	APP CRS	Rwy ldg	5006
111.7	036°	TDZE	355
		Apt Elev	370

ILS or LOC RWY 4
ORANGE COUNTY (MGJ)

Circling Rwy 8, 22, 26 NA at night.
NA Rwy 4 helicopter visibility reduction below ¾ SM NA.

MISSED APPROACH: Climb to 1100 then climbing left turn to 4000 direct HUO VOR/DME and hold.

ASOS	NEW YORK APP CON	CLNC DEL	UNICOM
119.275	132.75 363.1	123.85	122.725 (CTAF) L

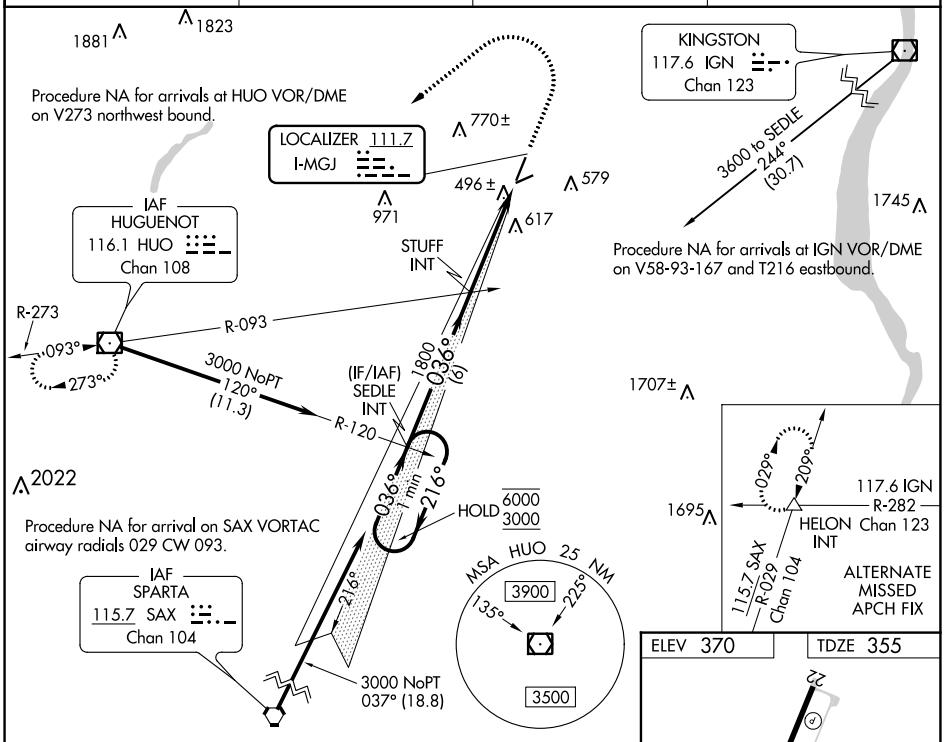

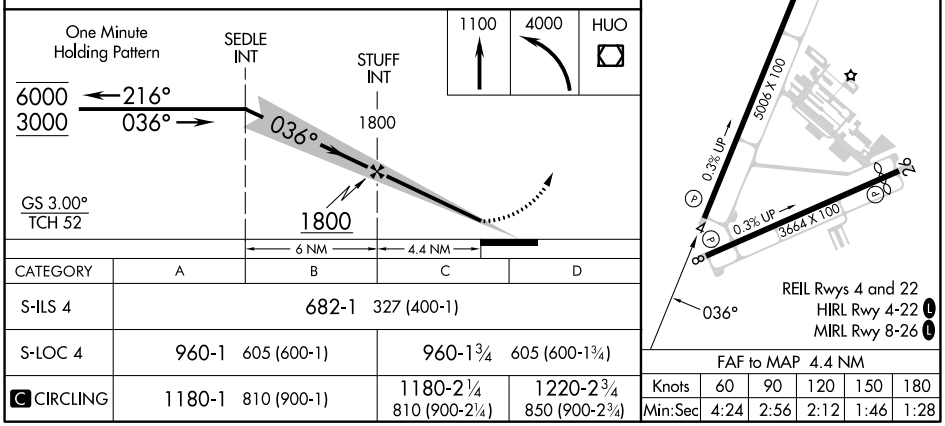

CATEGORY	A	B	C	D
S-ILS 4	682-1 327 (400-1)			
S-LOC 4	960-1 605 (600-1)		960-1¾ 605 (600-1¾)	
C CIRCLING	1180-1 810 (900-1)		1180-2¼ 810 (900-2¼)	1220-2¾ 850 (900-2¾)

FAF to MAP 4.4 NM

Knots	60	90	120	150	180
Min:Sec	4:24	2:56	2:12	1:46	1:28

NE-2, 18 APR 2024 to 16 MAY 2024