LOC/DME I-CBE	APP CRS	Rwy Ldg	5047
110.5	228°	TDZE	775
Chan 42		Apt Elev	775

LOC/DME RWY 23
GREATER CUMBERLAND RGNL (CBE)

When local altimeter setting not received, use Winchester altimeter setting and increase all MDA 100 feet, increase S-23 Cat B visibility ¼ mile, Cats C and D ½ mile. Night landing: Rwy 5, 11, 29 NA. Circling NA northwest of Rwy 5/23. Helicopter visibility reduction below ¾ SM NA.

-14°C

MISSED APPROACH: Climbing left turn to 5000 on heading 175° and on ESL VOR/DME R-046 to KEYER/ESL 18.8 DME and hold, continue climb-in-hold to 5000.

AWOS-3	JOHNSTOWN APP CON ★	UNICOM
128.625	121.2 299.2	122.8 (CTAF) L

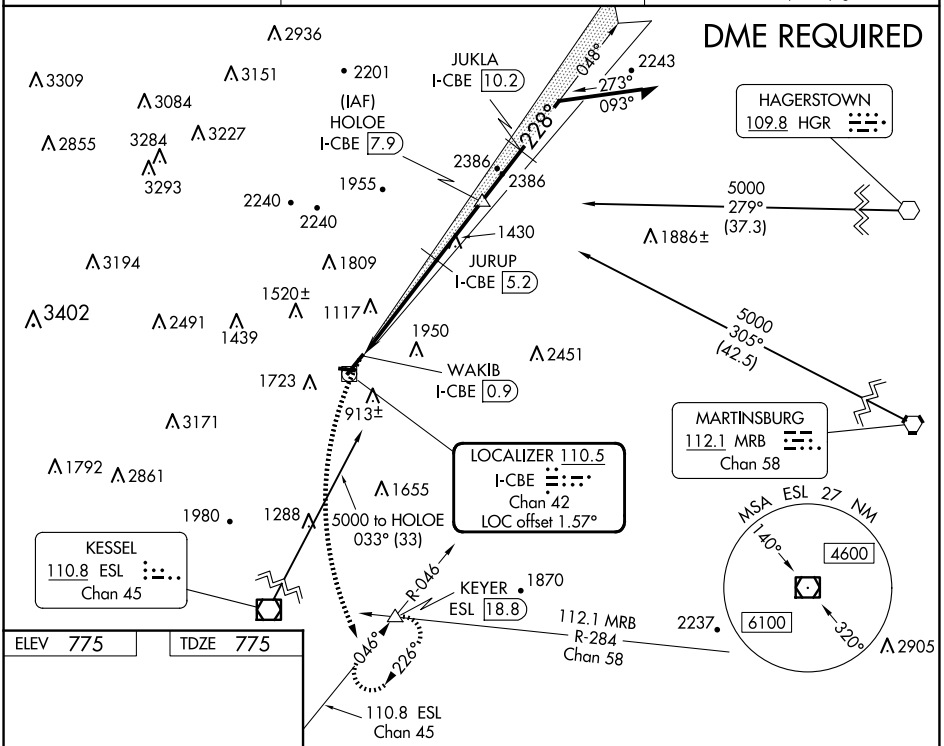

ELEV 775	TDZE 775

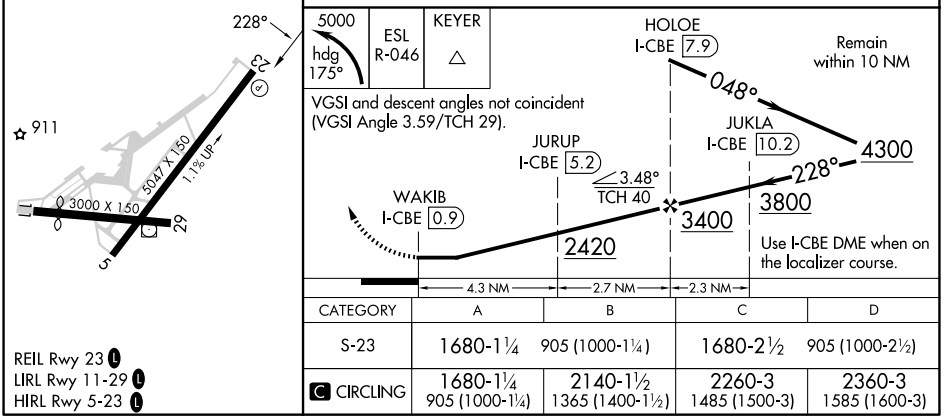

CATEGORY	A	B	C	D
S-23	1680-1¼ 905 (1000-1¼)		1680-2½	905 (1000-2½)
C CIRCLING	1680-1¼ 905 (1000-1¼)	2140-1½ 1365 (1400-1½)	2260-3 1485 (1500-3)	2360-3 1585 (1600-3)

REIL Rwy 23 L
LIRL Rwy 11-29 L
HIRL Rwy 5-23 L

NE-3, 27 NOV 2025 to 25 DEC 2025

NE-3, 27 NOV 2025 to 25 DEC 2025