FRITR THREE DEPARTURE (RNAV)

(FRITR3.DOTSS) 13SEP18

LONG BEACH (DAUGHERTY FLD) (LGB)
LONG BEACH, CALIFORNIA

ATIS
127.75
CLNC DEL
118.15
GND CON
133.0 257.6
LONG BEACH TOWER★
119.4 257.6 (Rwy 12)
120.5 257.6 (Rwy 30)
SOCAL DEP CON
125.35 316.125 (Rwy 12)
127.2 269.6 (Rwy 26R, 30)

DEPARTURE ROUTE DESCRIPTION

TAKEOFF RUNWAY 12: Climb heading 121° to 600, then on heading 121° or as assigned by ATC for vectors to cross FRITR at or above 5000, then on track 076° to DOTSS, thence. . . .

TAKEOFF RUNWAY 26R: Climb heading 256° to 580, then on heading 180° or as assigned by ATC for vectors to cross FRITR at or above 5000, then on track 076° to DOTSS, thence. . . .

TAKEOFF RUNWAY 30: Climb heading 301° to 1500, then left turn heading 180° or as assigned by ATC for vectors to cross FRITR at or above 5000, then on track 076° to DOTSS, thence. . . .

. . . .on (transition). Maintain 17000. Expect higher altitude 10 minutes after departure.

AVRRY TRANSITION (FRITR3.AVRRY)

CNERY TRANSITION (FRITR3.CNERY)

TCATE TRANSITION (FRITR3.TCATE)

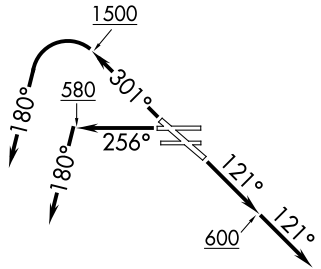

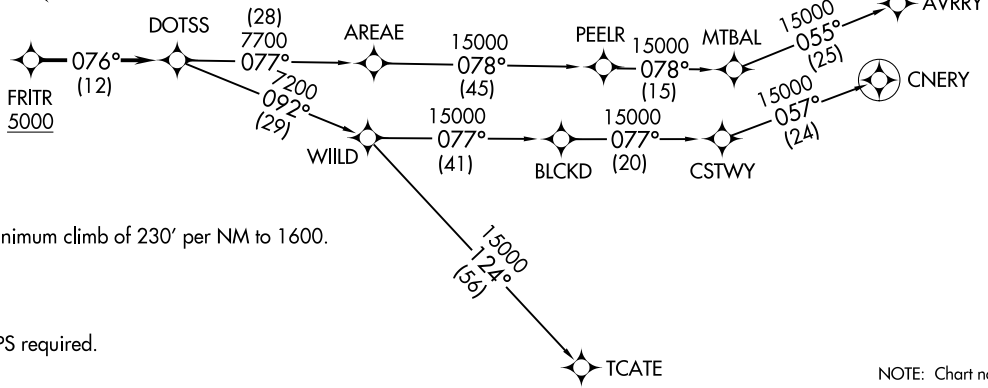

TOP ALTITUDE: 17000

TAKEOFF MINIMUMS
Rwys 8L/R, 26L: NA-ATC.
Rwys 12, 30: Standard.
Rwy 26R: Standard with a minimum climb of 230′ per NM to 1600.

NOTE: RADAR required.
NOTE: RNAV 1.
NOTE: DME/DME/IRU or GPS required.
NOTE: Turbojet aircraft only.

NOTE: Chart not to scale.

(FRITR3.DOTSS) 21168

FRITR THREE DEPARTURE (RNAV)

AL-236 (FAA)

LONG BEACH (DAUGHERTY FLD) (LGB)
LONG BEACH, CALIFORNIA