SUMTER, SOUTH CAROLINA

TACAN Y RWY 22R

SHAW AFB (KSSC)

[USAF]

TACAN SSC Chan 38	APCH CRS 222°		22R	22L
		Rwy ldg	10,014	8014
		TDZE	240	235
		Arpt Elev	241	241

RADAR required when R-6002 active.

* When ALS inop, increase CAT AB RVR to 55, vis to 1 mile; CAT CDE vis to 1½ miles.

ALSF-1

MISSED APPROACH: Climbing to 2000, intercept SSC TACAN R-223 to PINIE and hold.

ATIS★	APP CON★	TOWER★	GND CON
132.125 270.1	125.4 318.1	126.65 254.25	126.1 275.8

** When ALS inop, increase CAT AB RVR to 55, vis to 1 mile; CAT CDE vis to 1⅜ miles.

Sidestep Rwy 22L: Terrain 239′ MSL, 200′ prior to threshold, 200′ right of course. When VGSI inop, sidestep procedure NA at night.

CAUTION: When Rwy 4L, 22L VGSI inop, circling to Rwy 4L, 22L NA at night. Terrain 239′ MSL, 200′ prior to threshold, 200′ left of centerline.

USAF Only: When Rwy 22L VGSI inop, sidestep or circling to Rwy 22L authorized at night with MAJCOM A3 approval.

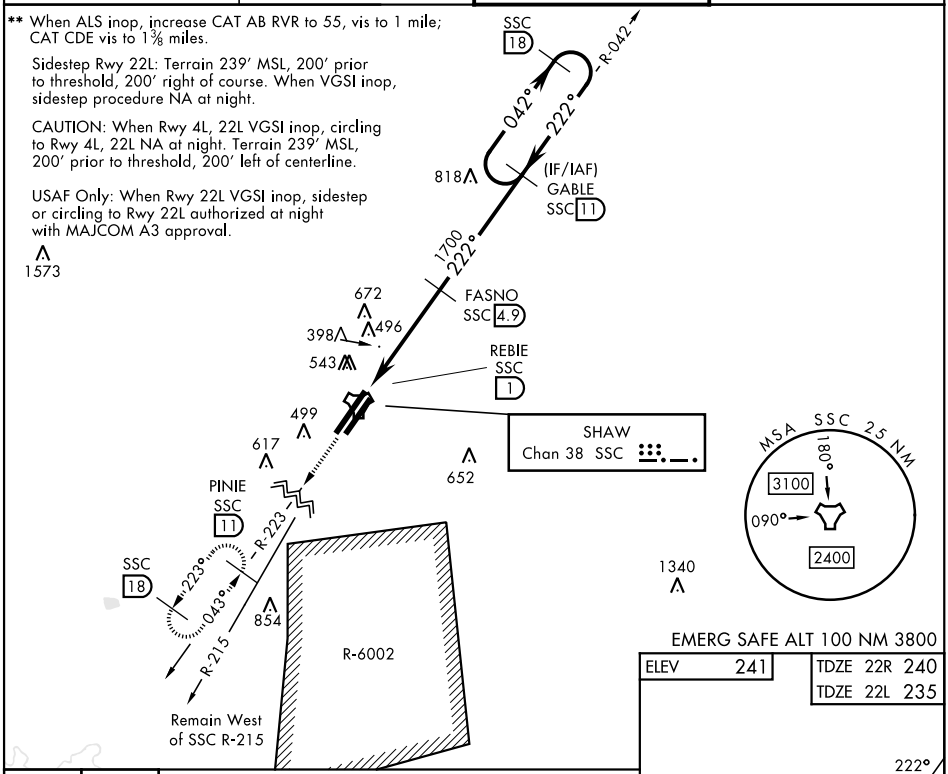

ELEV	241

TDZE 22R	240
TDZE 22L	235

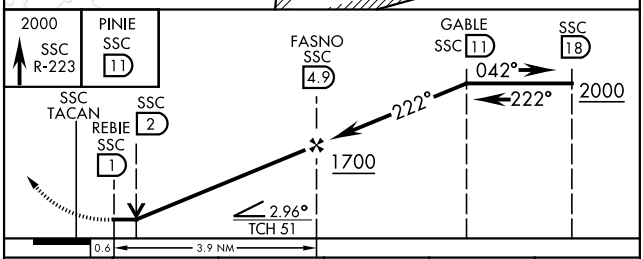

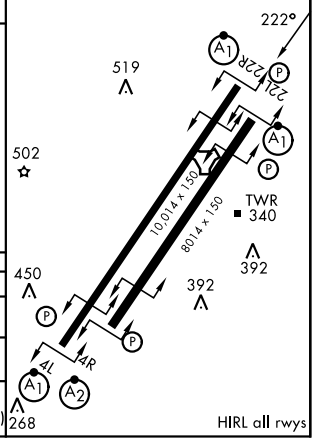

CATEGORY	A	B	C	D	E
S-22R*	760/24 520 (600-½)		760/55 520 (600-1)		
SIDESTEP ** 22L	760/50 505 (600-1)		760/55 505 (600-1)		
CIRCLING	820-1 579 (600-1)	880-1 639 (700-1)	1000-2¼ 759 (800-2¼)	1000-2½ 759 (800-2½)	1000-2¾ 759 (800-2¾)

SE-2, 19 FEB 2026 to 19 MAR 2026

SE-2, 19 FEB 2026 to 19 MAR 2026