WAAS CH 45647 W36A	APP CRS 003°	Rwy Ldg 5002 TDZE 469 Apt Elev 472

RNAV (GPS) RWY 36
DAVIESS COUNTY (DCY)

RNP APCH - GPS.

For uncompensated Baro-VNAV systems, LNAV/VNAV NA below -15°C or above 54°C.
Rwy 36 helicopter visibility reduction below ¾ SM NA. Circling Rwy 9, 27 NA.

MISSED APPROACH: Climb to 2600 direct UCFEX and hold.

AWOS-3PT	EVANSVILLE APP CON ★	UNICOM
119.075	125.6 343.7	122.8 (CTAF) L

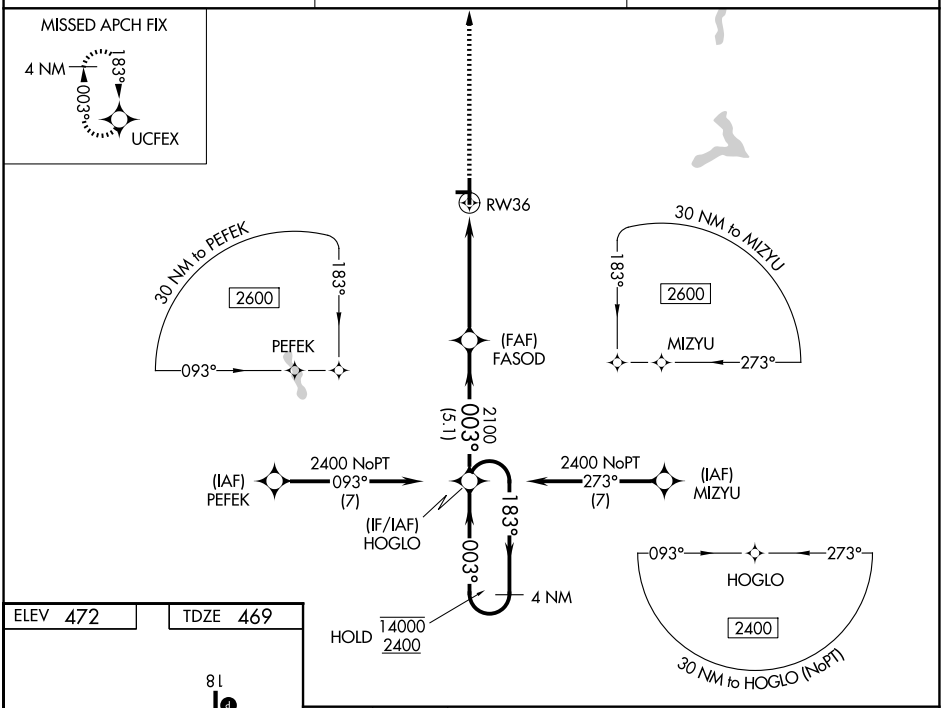

ELEV 472 TDZE 469

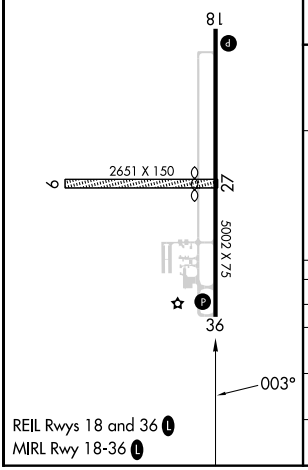

REIL Rwys 18 and 36 L
MIRL Rwy 18-36 L

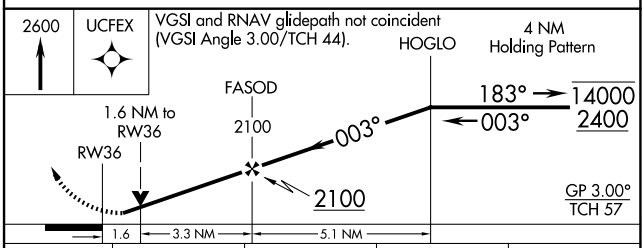

CATEGORY	A	B	C	D
LPV DA	852-1⅛ 383 (400-1⅛)			
LNAV/VNAV DA	1020-1⅝ 551 (600-1⅝)			
LNAV MDA	1020-1 551 (600-1)		1020-1⅝ 551 (600-1⅝)	
CIRCLING	1040-1 568 (600-1)	1080-1 608 (700-1)	1080-1¾ 608 (700-1¾)	1300-2¾ 828 (900-2¾)

EC-2, 19 FEB 2026 to 19 MAR 2026