# HOODO SEVEN DEPARTURE (RNAV)
(HOODO7.HOODO) 07OCT21

LIBERTY MUNI (T78)
LIBERTY, TEXAS

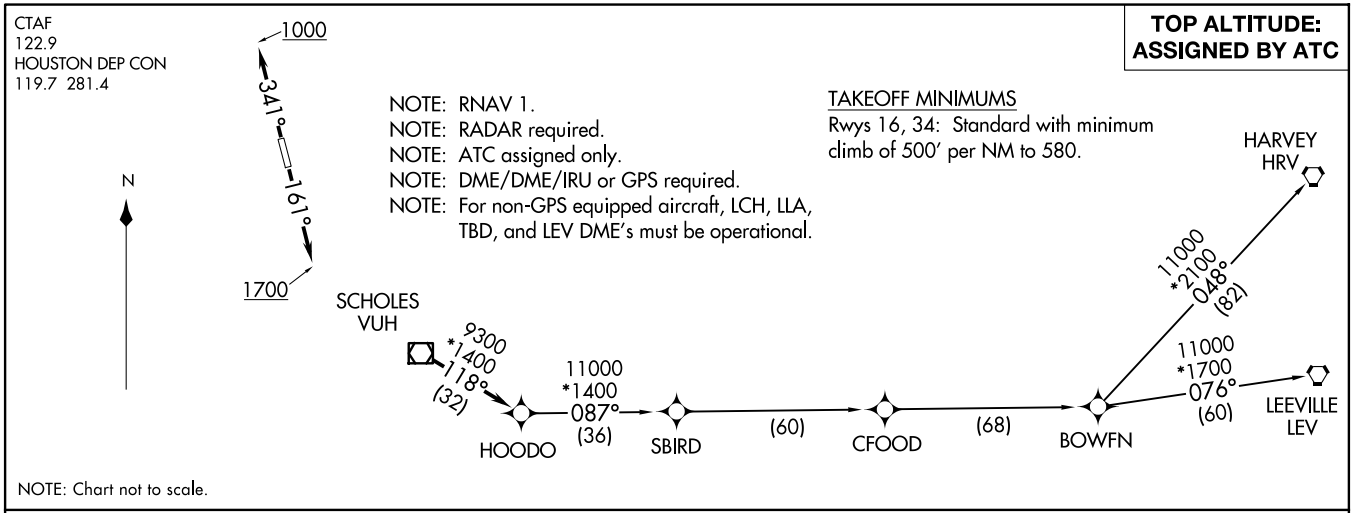


NOTE: Chart not to scale.

## DEPARTURE ROUTE DESCRIPTION

TAKEOFF RUNWAY 16: Climb on heading 161° to 1700, for RADAR vectors to VUH VOR/DME, thence . . . .
TAKEOFF RUNWAY 34: Climb on heading 341° to 1000, for RADAR vectors to VUH VOR/DME, thence . . . .

. . . . on track 118° to HOODO, then on (transition). Maintain ATC assigned altitude.
Expect filed altitude 10 minutes after departure.

BOWFN TRANSITION (HOODO7.BOWFN)
CFOOD TRANSITION (HOODO7.CFOOD)
HARVEY TRANSITION (HOODO7.HRV)
LEEVILLE TRANSITION (HOODO7.LEV)
SBIRD TRANSITION (HOODO7.SBIRD)

(HOODO7.HOODO) 21280
HOODO SEVEN DEPARTURE (RNAV)
AL-5196 (FAA)
LIBERTY MUNI (T78)
LIBERTY, TEXAS