ILS or LOC RWY 8R
GEORGE BUSH INTCNTL/HOUSTON (IAH)

LOC/DME I-IAH	APP CRS	Rwy Ldg	9402
109.7	087°	TDZE	95
Chan 34		Apt Elev	96

RNAV 1-GPS or RADAR required for procedure entry, DME.

Simultaneous approach authorized. For inop ALS, increase S-LOC 8R Cat C/D/E visibility to 1⅜ SM. For inop ALS, increase S-ILS 8R Cat E visibility to RVR 4000.

MALSR

MISSED APPROACH: Climb to 3000 on heading 087° and on DAS VORTAC R-242 to DAS VORTAC and hold.

D-ATIS	HOUSTON APP CON	HOUSTON TOWER	GND CON
124.05	120.05 379.1 E 124.35 316.15 W	125.35 290.2	118.575

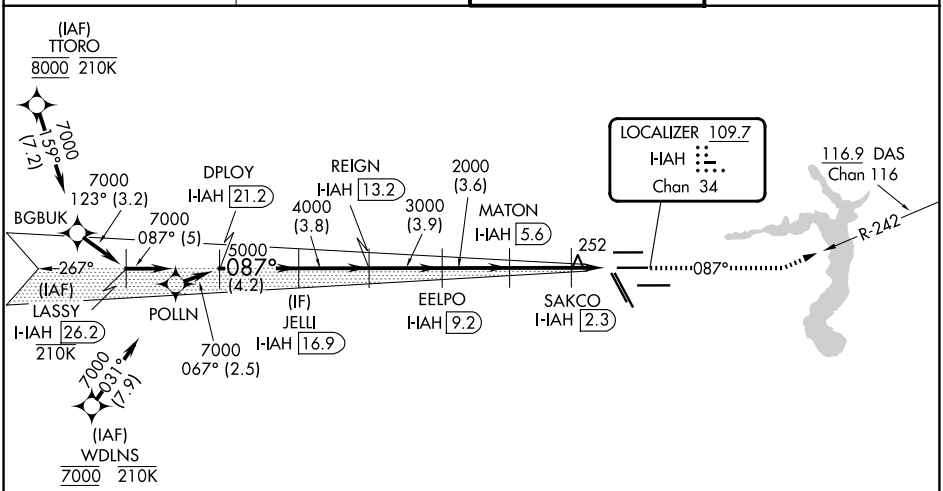

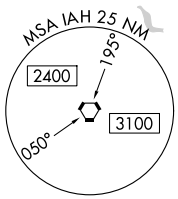

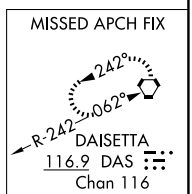

ELEV 96 | D | TDZE 95

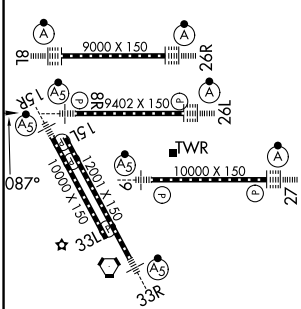

TDZ/CL Rwys 8R, 8L, 15R, 26R, 26L, 27 and 33L
HIRL all Rwys

VGSI and ILS glidepath not coincident
(VGSI Angle 3.00/TCH 72).

3000	DAS	DAS
hdg 087°	R-242	

*LOC only.

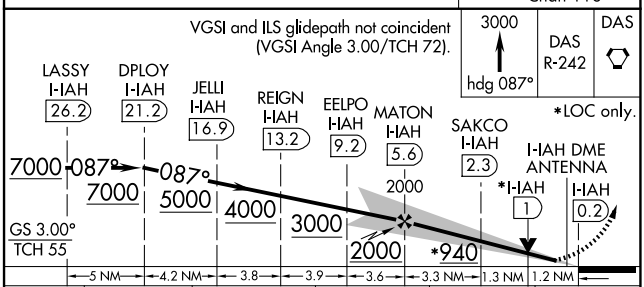

CATEGORY	A	B	C	D	E
S-ILS 8R	295/18 200 (200-½)				
S-LOC 8R	560/24 465 (500-½)		560/50 465 (500-1)		

SC-5, 16 APR 2026 to 14 MAY 2026
SC-5, 16 APR 2026 to 14 MAY 2026