ILS RWY 10 (CAT II & III)
HARTSFIELD/JACKSON ATLANTA INTL (ATL)

LOC/DME I-OMO	APP CRS	Rwy Ldg	9000
111.55	095°	TDZE	1000
Chan 52 (Y)		Apt Elev	1026

DME or RADAR required. RNP APCH - GPS from YINNZ.

Simultaneous approach authorized with Rwy 9L or 8R or 8L, or Rwys 9L and 8L.

ALSF-2

MISSED APPROACH: Climb to 1400 then climbing right turn to 3000 on heading 120° and AHN R-222 to IHOPE/AHN 36 DME and hold.

D-ATIS	ATLANTA APP CON	ATLANTA TOWER 8L-26R	8R-26L	9L-27R	9R-27L	10-28	ALL RWYS	GND CON (8L-26R,8R-26L)	(9L-27R,9R-27L)	10-28	ALL RWYS
119.65	127.9 379.9	119.1	125.325	123.85	119.3	119.5	254.4	121.9	121.75	121.65	254.4

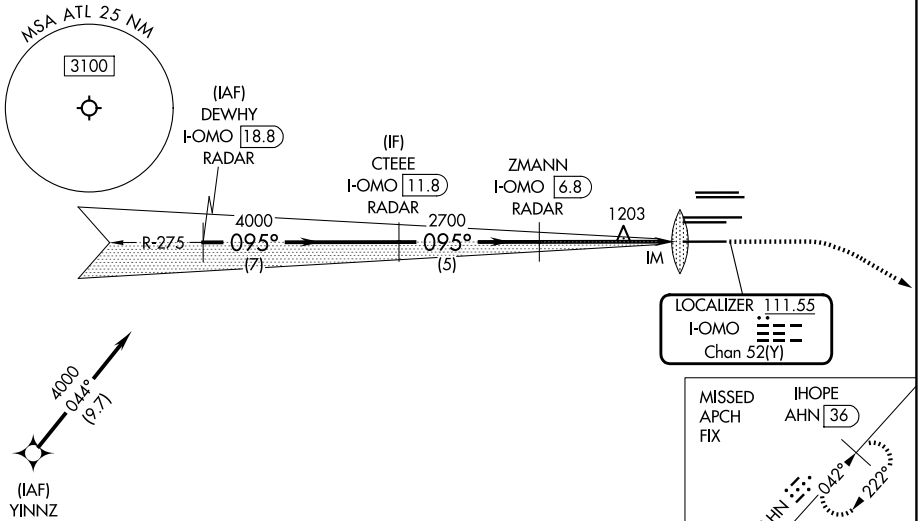

ELEV	1026	D	TDZE	1000

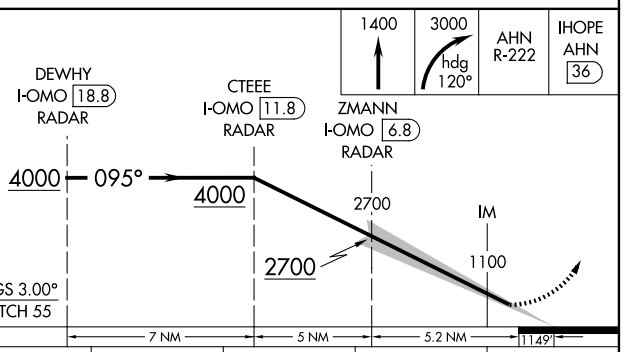

CATEGORY	A	B	C	D
S-ILS 10	CAT II RA 110/12 100 DA 1100			
S-ILS 10	CAT III RVR 07			

CATEGORY II & III ILS - SPECIAL AIRCREW & AIRCRAFT CERTIFICATION REQUIRED

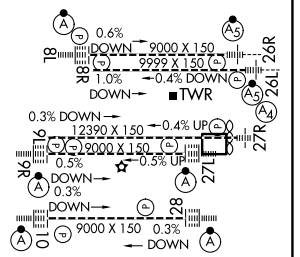

HIRL all Rwys
TDZL/RCLS Rwys 8L, 9R, 10, 26R, 27L and 28

SE-4, 14 MAY 2026 to 11 JUN 2026