HOODO SEVEN DEPARTURE (RNAV)
(HOODO7.HOODO) 07OCT21

HOUSTON EXEC (TME)
HOUSTON, TEXAS

ATIS
119.525
CLNC DEL
132.075
GND CON
132.075
EXECUTIVE TOWER ✱
122.975 (CTAF)
HOUSTON DEP CON
123.8 257.7

NOTE: RNAV 1.
NOTE: RADAR required.
NOTE: ATC assigned only.
NOTE: DME/DME/IRU or GPS required.
NOTE: For non-GPS equipped aircraft, LCH, LLA, TBD, and LEV DME's must be operational.

TOP ALTITUDE: ASSIGNED BY ATC

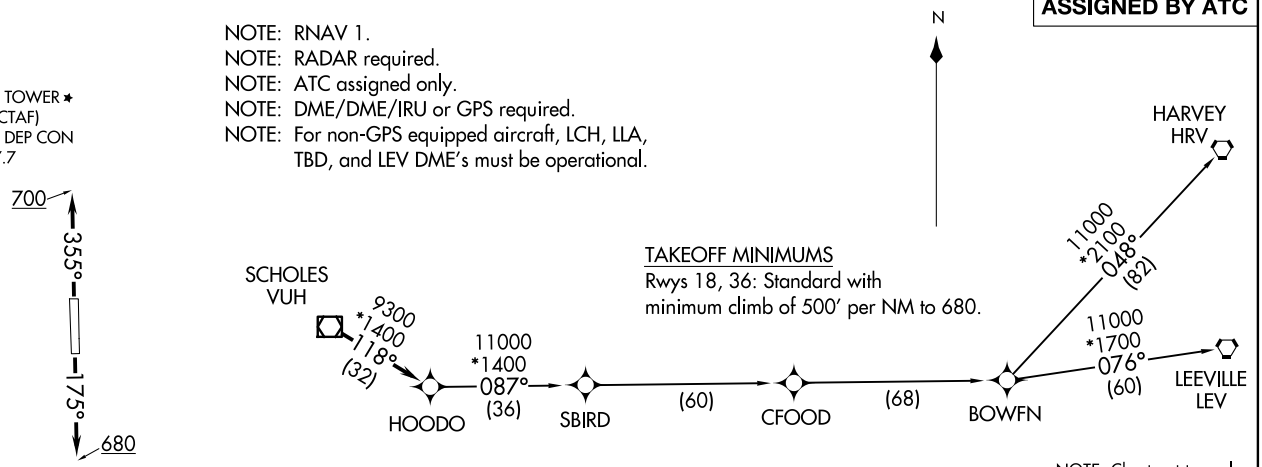

TAKEOFF MINIMUMS
Rwys 18, 36: Standard with minimum climb of 500′ per NM to 680.

NOTE: Chart not to scale.

DEPARTURE ROUTE DESCRIPTION

TAKEOFF RUNWAY 18: Climb on heading 175° to 680, for RADAR vectors to VUH VOR/DME, thence . . . .
TAKEOFF RUNWAY 36: Climb on heading 355° to 700, for RADAR vectors to VUH VOR/DME, thence . . . .

. . . . on track 118° to HOODO, then on (transition). Maintain ATC assigned altitude.
Expect filed altitude 10 minutes after departure.

BOWFN TRANSITION (HOODO7.BOWFN)
CFOOD TRANSITION (HOODO7.CFOOD)
HARVEY TRANSITION (HOODO7.HRV)
LEEVILLE TRANSITION (HOODO7.LEV)
SBIRD TRANSITION (HOODO7.SBIRD)

(HOODO7.HOODO) 21280
HOODO SEVEN DEPARTURE (RNAV)
AL-10328 (FAA)
HOUSTON EXEC (TME)
HOUSTON, TEXAS