TOP ALTITUDE: 16000

HOUSTON DEP CON
132.25 285.425
D-ATIS
124.05
CLNC DEL
128.1
CPDLC
GND CON
118.575 (8L/R, 9, 26L/R, 27)
121.7 (15L/R, 33L/R)
HOUSTON TOWER
120.725 290.2 (8L/R,26R)
125.35 290.2 (8R/26L)
127.3 288.25 (15L/R, 33L/R)
135.15 290.2 (9/27)

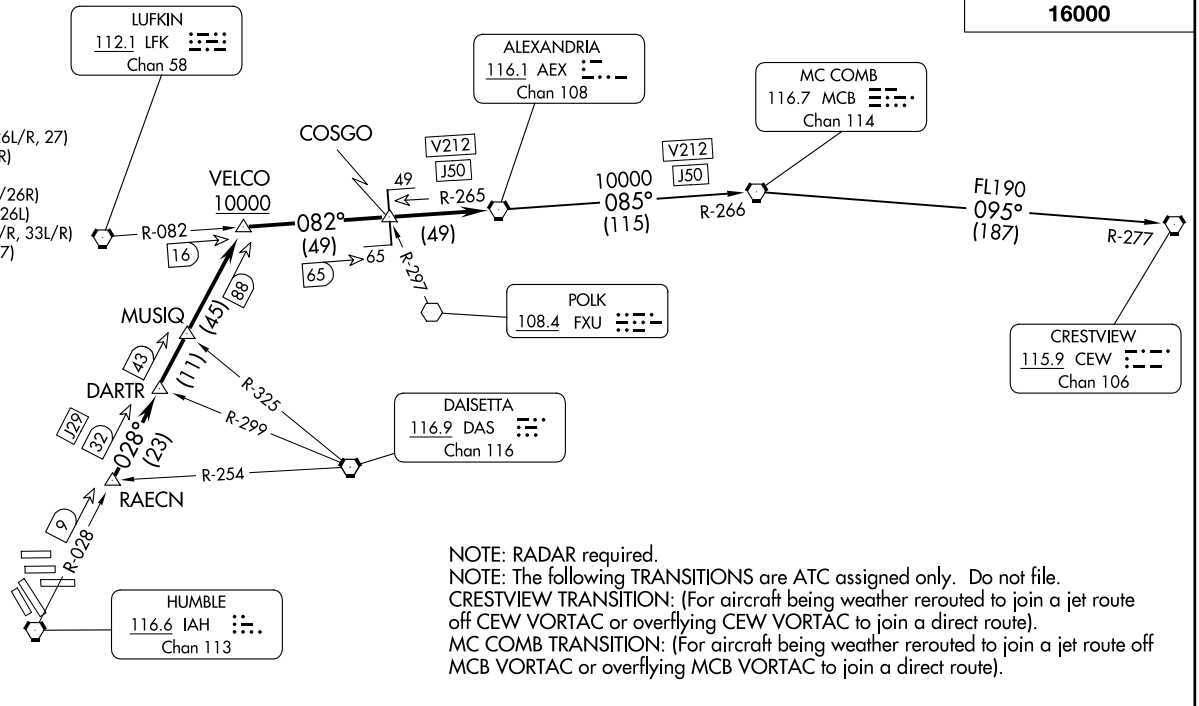

NOTE: RADAR required.
NOTE: The following TRANSITIONS are ATC assigned only. Do not file.
CRESTVIEW TRANSITION: (For aircraft being weather rerouted to join a jet route off CEW VORTAC or overflying CEW VORTAC to join a direct route).
MC COMB TRANSITION: (For aircraft being weather rerouted to join a jet route off MCB VORTAC or overflying MCB VORTAC to join a direct route).

TAKEOFF MINIMUMS
Rwys 8L/R, 9, 15L/R, 26L/R, 27, 33L/R: Standard.

NOTE: Chart not to scale.

(CONTINUED ON FOLLOWING PAGE)

DEPARTURE ROUTE DESCRIPTION

TAKEOFF ALL RUNWAYS: Climb on assigned heading for RADAR vectors to RAECN INT, maintain 16000. Expect filed altitude 10 minutes after departure, thence. . . .

. . . .on IAH R-028 to VELCO INT, cross VELCO INT at or above 10000, then right turn on LFK R-082 and AEX R-265 to AEX VORTAC.

CRESTVIEW TRANSITION (AEX3.CEW): From over AEX VORTAC on AEX R-085 and MCB R-266 to MCB VORTAC, then on MCB R-095 and CEW R-277 to CEW VORTAC.

MC COMB TRANSITION (AEX3.MCB): From over AEX VORTAC on AEX R-085 and MCB R-266 to MCB VORTAC.

SC-5, 11 JUN 2026 to 09 JUL 2026