# GLS RWY 4R

## NEWARK LIBERTY INTL (EWR)

| GBAS | APP CRS | Rwy Ldg | 8809 |
|---|---|---|---|
| CH 21083 | 039° | TDZE | 11 |
| G04B | | Apt Elev | 17 |

RNP APCH - GPS.
RADAR required.
T A NA Autopilot coupled approach NA below 211.

ALSF-2

MISSED APPROACH: (Do not exceed 210K until NEBTE) Climb to 560 then climbing right turn to 2000 direct TYNIE and on track 015° to NEBTE, cross NEBTE at or below 2000 then climbing left turn to 3000 on track 313° to FLYRS and hold, continue climb-in-hold to 3000.

| D-ATIS | NEWARK APP CON | NEWARK TOWER | GND CON |
|---|---|---|---|
| 115.7 134.825 | 128.55 379.9 | 118.3 257.6 | 121.8 |

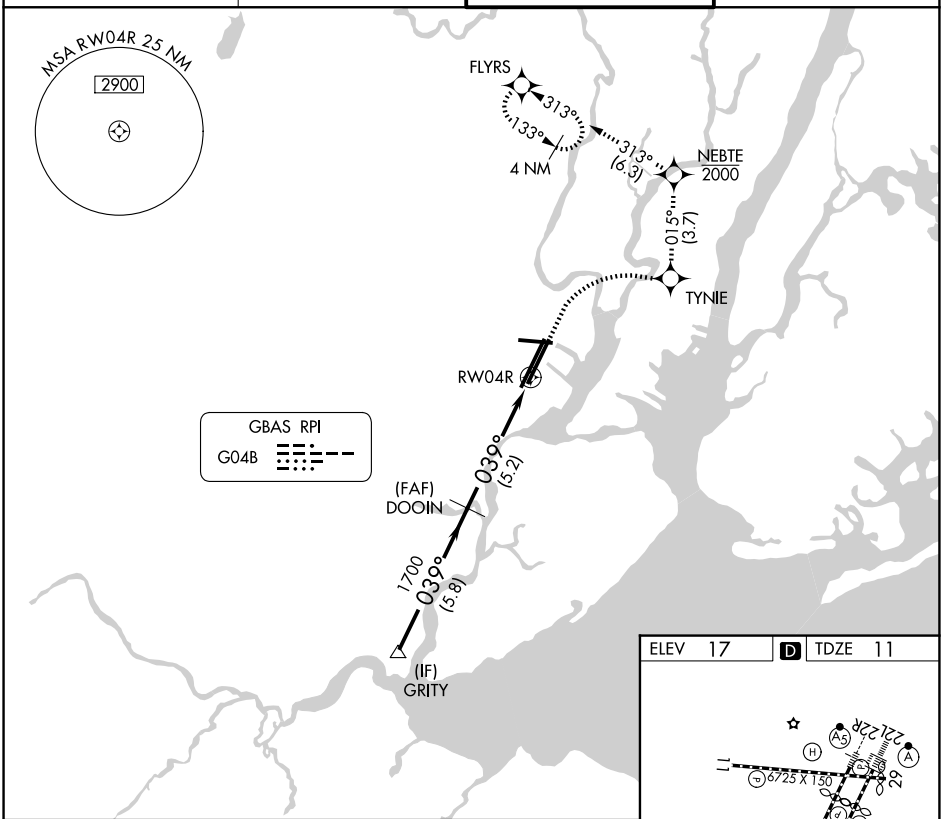


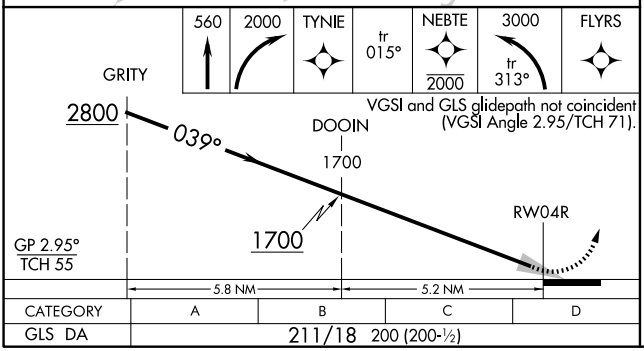


VGSI and GLS glidepath not coincident (VGSI Angle 2.95/TCH 71).

| CATEGORY | A | B | C | D |
|---|---|---|---|---|
| GLS DA | 211/18 200 (200-½) | | | |

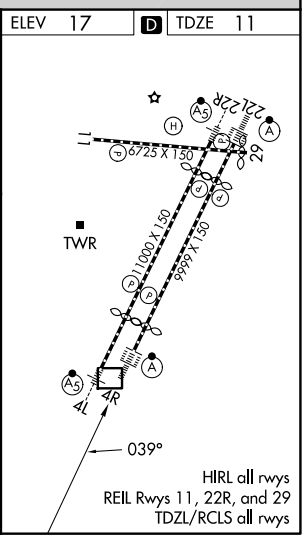


HIRL all rwys
REIL Rwys 11, 22R, and 29
TDZL/RCLS all rwys

NE-2, 06 AUG 2026 to 03 SEP 2026

NE-2, 06 AUG 2026 to 03 SEP 2026