WAAS CH **72704** **W13A**	APP CRS **133°**	Rwy Ldg **4300** TDZE **896** Apt Elev **897**

RNAV (GPS) RWY 13
CROOKSTON MUNI/KIRKWOOD FLD (CKN)

RNP APCH - GPS.

For uncompensated Baro-VNAV systems, LNAV/VNAV NA below -16°C or above 54°C. Circling NA to Rwys 17 and 35. Baro-VNAV and VDP NA when using GFK altimeter setting. When local altimeter setting not received, use GFK altimeter setting and increase LPV DA to 1159 feet. Increase LNAV/VNAV DA to 1347 feet and all visibilities ¼ SM. Increase all MDAs 80 feet and LNAV visibility Cat C ⅛ SM, and Circling visibility Cat C ¼ SM.

MISSED APPROACH: Climb to 3000 direct FAPVU and hold.

AWOS-3	GRAND FORKS APP CON ★	UNICOM
126.425	**118.1 318.1**	**122.7** (CTAF) L

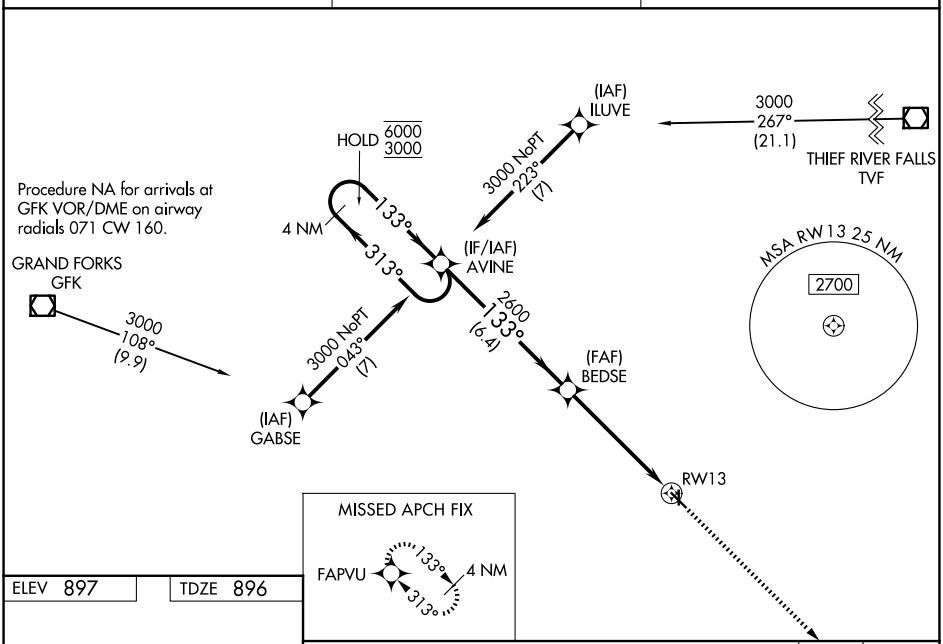

ELEV 897	TDZE 896

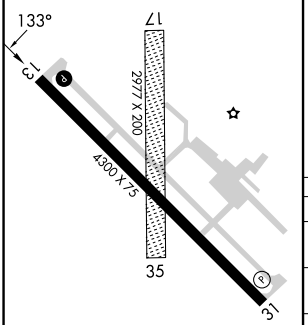

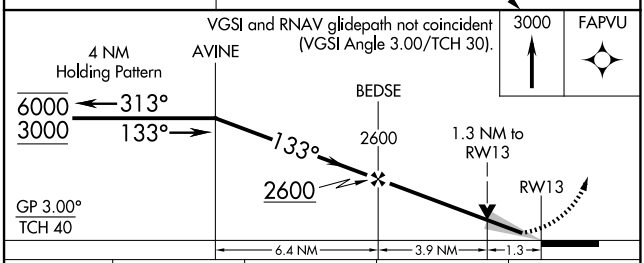

CATEGORY	A	B	C	D
LPV DA	1096-1 200 (200-1)			NA
LNAV/VNAV DA	1284-1⅛ 388 (400-1⅛)			NA
LNAV MDA	1340-1 444 (500-1)		1340-1⅜ 444 (500-1⅜)	NA
CIRCLING	1340-1 443 (500-1)	1360-1 463 (500-1)	1480-1½ 583 (600-1½)	NA

REIL Rwys 13 and 31 L
MIRL Rwy 13-31 L

NC-1, 06 AUG 2026 to 03 SEP 2026

NC-1, 06 AUG 2026 to 03 SEP 2026