APP CRS	Rwy Ldg	3194
237°	TDZE	87
	Apt Elev	87

RNAV (GPS) RWY 24
OLD BRIDGE (3N6)

RNP APCH - GPS.

NA

Procedure NA at night. Rwy 24 helicopter visibility reduction below 1 SM NA. Use Belmar/Farmingdale altimeter setting; when not received, use Wrightstown altimeter setting and increase all MDA 20 feet.

MISSED APPROACH: Climbing left turn to 2000 direct COL VOR/DME and hold.

BLM AWOS-3PT	MC GUIRE APP CON		GCO	UNICOM
121.625	126.475	363.8	121.725	123.075 (CTAF) L

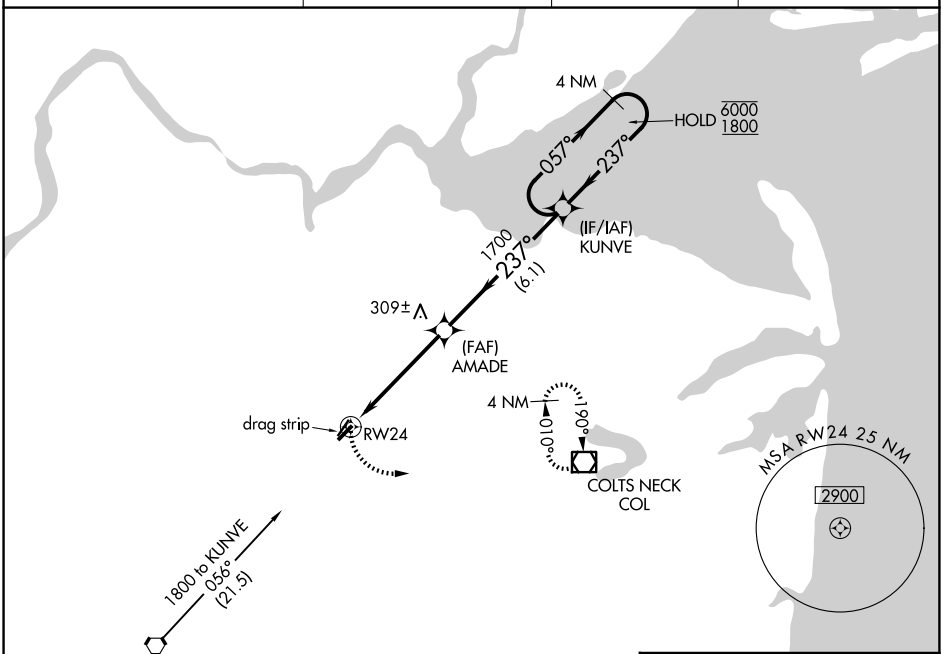

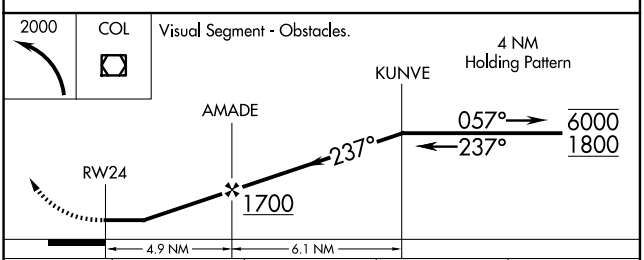

CATEGORY	A	B	C	D
LNAV MDA	620-1 533 (600-1)		NA	
CIRCLING	620-1 533 (600-1)	640-1 553 (600-1)	NA	

ELEV 87 TDZE 87

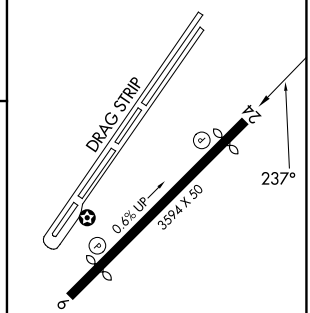

REIL Rwys 6 and 24 L
MIRL Rwy 6-24 L

NE-2, 06 AUG 2026 to 03 SEP 2026