VORTAC VUZ 114.4 Chan 91	APP CRS 302°	Rwy Ldg N/A TDZE N/A Apt Elev 483

VOR/DME-A

WALKER COUNTY/BEVILL FLD (JFX)

When local altimeter setting not received, use Birmingham altimeter setting and increase all MDA 120 feet and Cat C/D visibility ¼ mile.

MISSED APPROACH: Climbing right turn to 3000 on VUZ VORTAC R-302 to CREAL/14 DME and hold.

AWOS-3PT	BIRMINGHAM APP CON	CLNC DEL	GCO	UNICOM
119.225	127.675 338.2	121.725	121.725	123.075 (CTAF) L

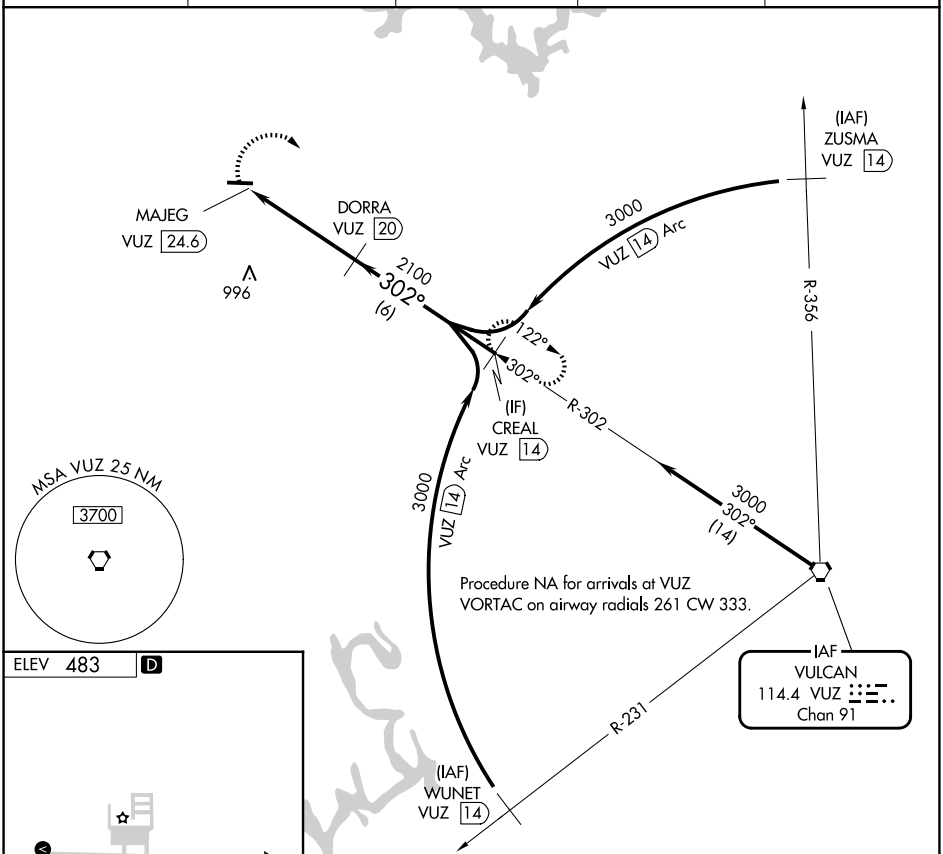

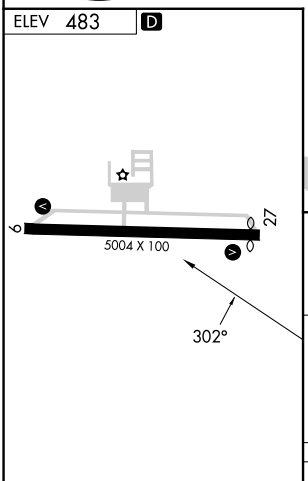

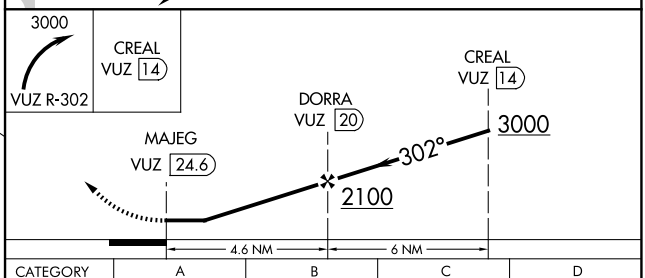

CATEGORY	A	B	C	D
CIRCLING	1160-1 677 (700-1)	1160-1¼ 677 (700-1¼)	1160-2 677 (700-2)	1360-2¾ 877 (900-2¾)

MIRL Rwy 9-27 L
REIL Rwys 9 and 27 L

SE-4, 06 AUG 2026 to 03 SEP 2026

SE-4, 06 AUG 2026 to 03 SEP 2026