TOP ALTITUDE: ASSIGNED BY ATC

HOUSTON DEP CON
123.8 257.7
ATIS
119.525
CLNC DEL
132.075
GND CON
132.075
EXECUTIVE TOWER ★
126.975 (CTAF)

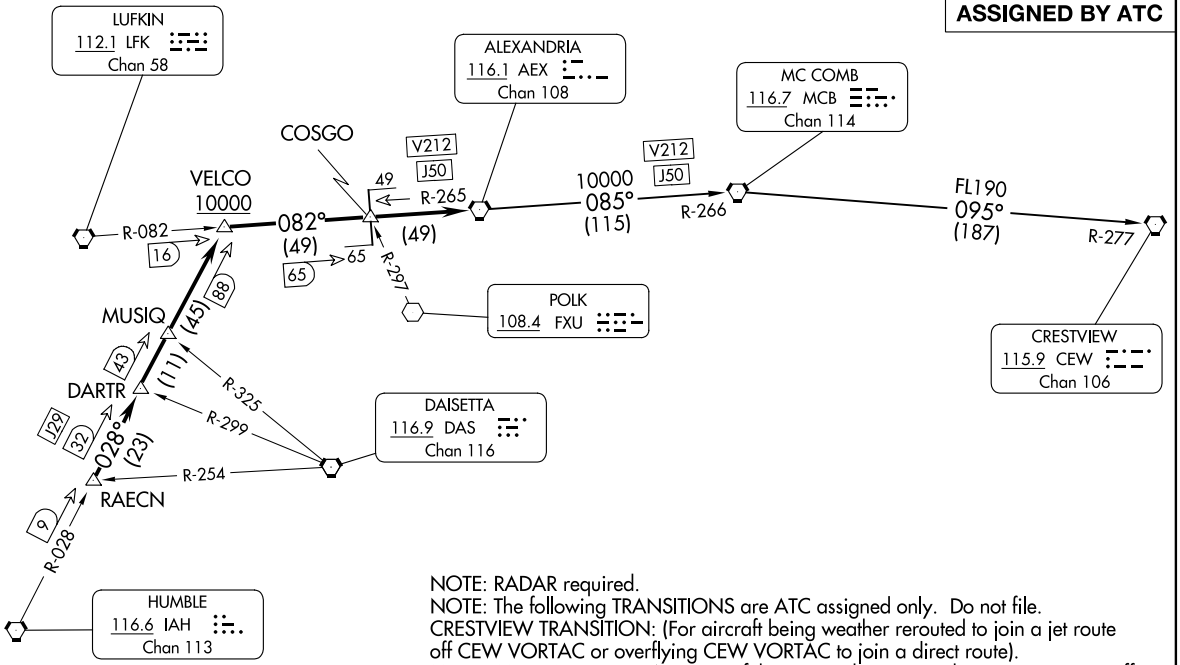

NOTE: RADAR required.
NOTE: The following TRANSITIONS are ATC assigned only. Do not file.
CRESTVIEW TRANSITION: (For aircraft being weather rerouted to join a jet route off CEW VORTAC or overflying CEW VORTAC to join a direct route).
MC COMB TRANSITION: (For aircraft being weather rerouted to join a jet route off MCB VORTAC or overflying MCB VORTAC to join a direct route).

TAKEOFF MINIMUMS
Rwys 18, 36: Standard.

NOTE: Chart not to scale.

(CONTINUED ON FOLLOWING PAGE)

DEPARTURE ROUTE DESCRIPTION

TAKEOFF RUNWAY 18: When entering controlled airspace, climb on assigned heading for RADAR vectors to RAECN INT. Maintain ATC assigned altitude. Expect filed altitude 10 minutes after departure, thence. . . .
TAKEOFF RUNWAY 36: Climb on heading 355° to 700 before turning. When entering controlled airspace, climb on assigned heading for RADAR vectors to RAECN INT. Maintain ATC assigned altitude. Expect filed altitude 10 minutes after departure, thence. . . .

. . . .on IAH R-028 to VELCO INT, cross VELCO INT at or above 10000, then right turn on LFK R-082 and AEX R-265 to AEX VORTAC.

CRESTVIEW TRANSITION (AEX3.CEW): From over AEX VORTAC on AEX R-085 and MCB R-266 to MCB VORTAC, then on MCB R-095 and CEW R-277 to CEW VORTAC.

MC COMB TRANSITION (AEX3.MCB): From over AEX VORTAC on AEX R-085 and MCB R-266 to MCB VORTAC.

SC-5, 01 OCT 2026 to 29 OCT 2026