MMALT SEVEN DEPARTURE (RNAV)

(MMALT7.MMALT) 30NOV23

DAVID WAYNE HOOKS MEML (DWH)

HOUSTON, TEXAS

RNAV 1 - DME/DME/IRU or GPS.

RADAR required.

TOP ALTITUDE: ASSIGNED BY ATC

HOUSTON DEP CON
119.7 281.4
ATIS
128.375
CLNC DEL
119.45
GND CON
121.8 239.0
HOOKS TOWER ★
133.1 354.1 (E)
118.4 (CTAF) 354.1 (W)

TAKEOFF MINIMUMS
Rwys 17L, 35R: NA-Environmental.
Waterways 17, 35: NA-Air traffic.
Rwys 17R, 35L: Standard with minimum climb of 500'/NM to 660.

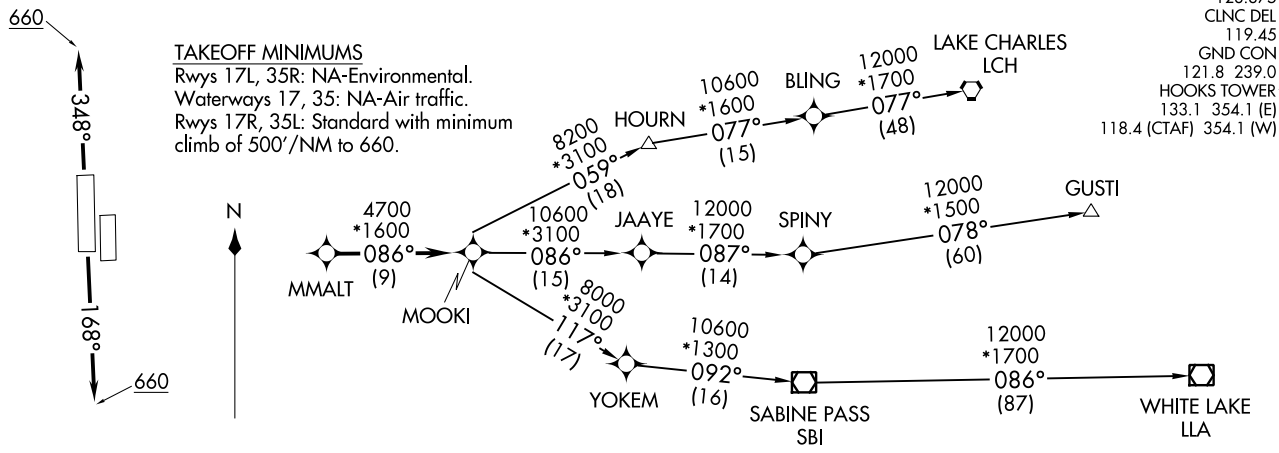

NOTE: GUSTI and LCH Transitions ATC assigned only for aircraft departing AXH, EFD, GLS, HPY, IWS, LBX, LVJ, SGR, TME, TØØ, T41 and 54T.

DEPARTURE ROUTE DESCRIPTION

TAKEOFF RUNWAY 17R: Climb on heading 168° to 660, for RADAR vectors to MMALT, thence. . . .
TAKEOFF RUNWAY 35L: Climb on heading 348° to 660, for RADAR vectors to MMALT, thence. . . .

. . . .on track 086° to MOOKI, then on (transition). Maintain ATC assigned altitude.
Expect filed altitude 10 minutes after departure.

GUSTI TRANSITION (MMALT7.GUSTI)
LAKE CHARLES TRANSITION (MMALT7.LCH)
WHITE LAKE TRANSITION (MMALT7.LLA)

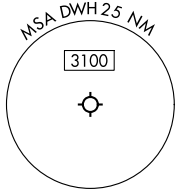

NOTE: Chart not to scale.

(MMALT7.MMALT) 26302

AL-5457 (FAA)

MMALT SEVEN DEPARTURE (RNAV)
DAVID WAYNE HOOKS MEML (DWH)
HOUSTON, TEXAS