APP CRS	Rwy Ldg	5005
094°	TDZE	784
	Apt Elev	787

RNAV (GPS) RWY 9
VAN WERT COUNTY (VNW)

RNP APCH - GPS.

Rwy 9 helicopter visibility reduction below ¾ SM NA.
Circling NA to Rwys 18 and 36. Circling Rwy 27 NA at night.

MISSED APPROACH: Climb to 3000 direct DRIFF and hold.

AWOS-3PT	FORT WAYNE APP CON	UNICOM
125.175	127.2 284.6	123.0 (CTAF) L

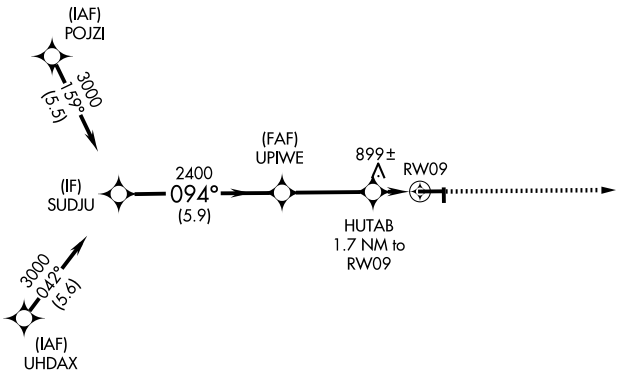

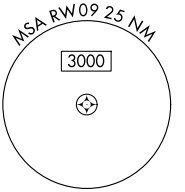

ELEV 787	TDZE 784

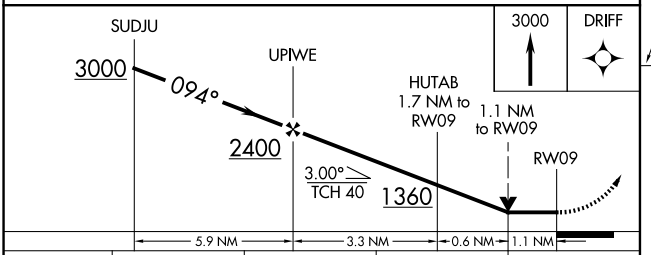

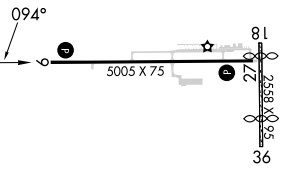

CATEGORY	A	B	C	D
LNAV MDA	1160-1 376 (400-1)			
CIRCLING	1340-1 553 (600-1)		1340-1½ 553 (600-1½)	1600-2¾ 813 (900-2¾)

MIRL Rwy 9-27 L
REIL Rwys 9 and 27 L

EC-2, 29 OCT 2026 to 26 NOV 2026
EC-2, 29 OCT 2026 to 26 NOV 2026